SEA-MATE SERIES
SM-CCP-R/A-HOSE

SEA-MATE Cable Connector Plug Right Angle
Mates with SM-BCR/FCR/CCR
Dummy Connector: SM-DSR

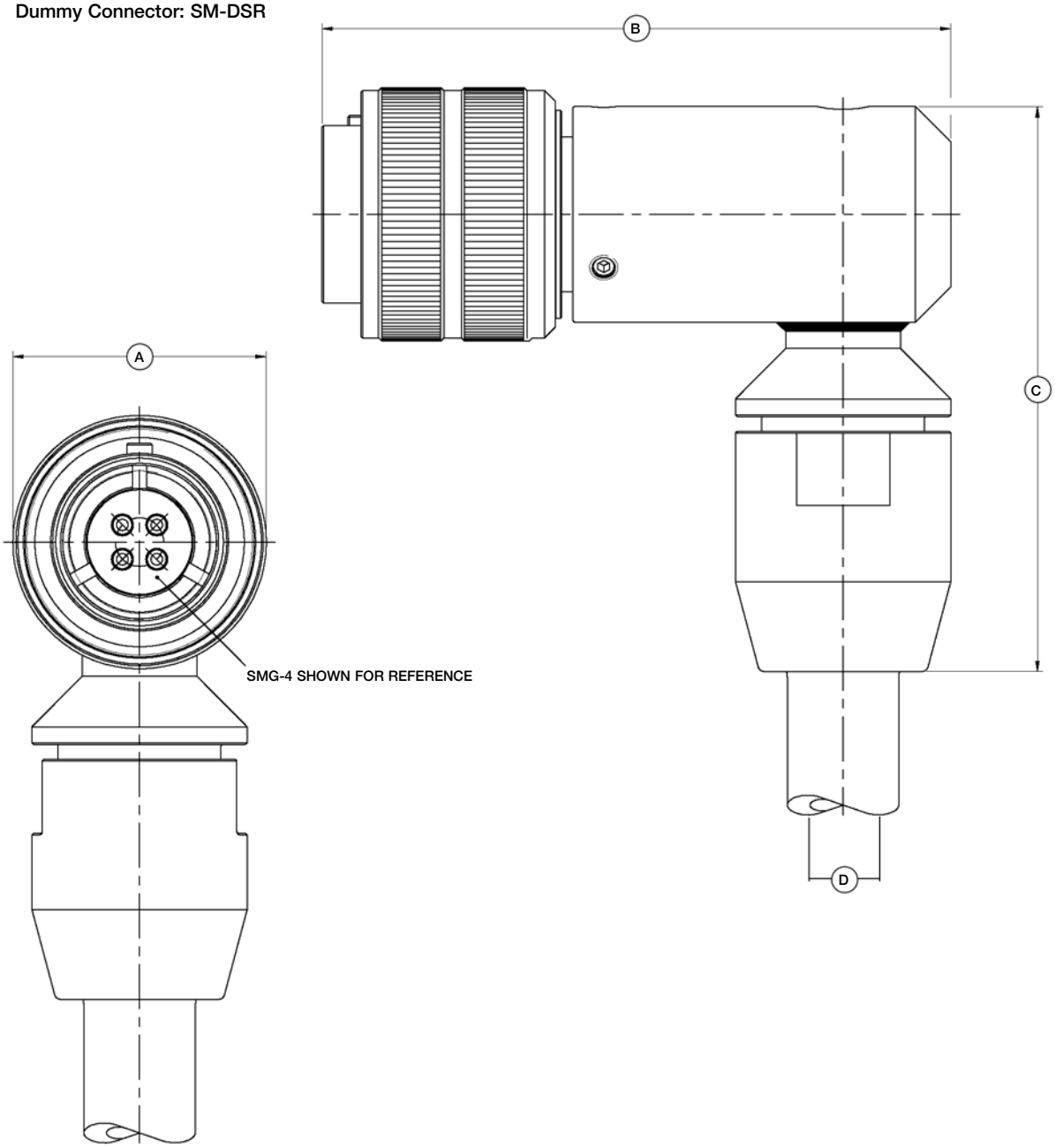

CONNECTOR	A - Ø (INCHES)	B - LENGTH (INCHES)	C - LENGTH (INCHES)	D - I.D. (INCHES)
SMG-CCP-R/A-HOSE	1.435	3.56	3.20	3/8
SMK-CCP-R/A-HOSE	1.810	3.85	3.98	5/8
SML-CCP-R/A-HOSE	2.185	4.04	4.39	3/4
SMM-CCP-R/A-HOSE	2.560	4.29	4.84	1